Insert Element FE 437 Z

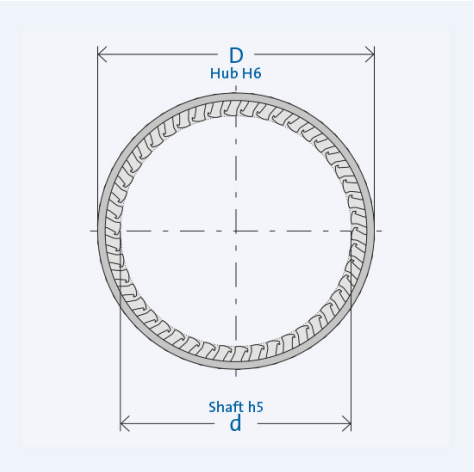

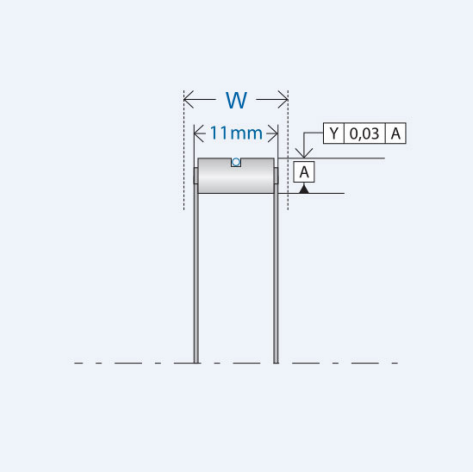

Item number 300455

Components

Freewheel clutch	Insert Element FE 400 Z
· Spring	Tension spring (Z)
· Cage	Stamped steel/ Plastic (PA)
· Sprags	Hardened bearing steel
	Start gap height h_0 = 4 mm

Key values

Ø Shaft d:	29 mm
Ø Hub D:	37 mm
Installed width W:	12 mm
Torque T_{nom}:	154 Nm
Speed n_{max}:	4800 rpm
Number of sprags:	34
Weight:	0.0177 kg
Operating temperature:	max. 140°C

Lubrication

Oil or grease lubrication

Delivered with corrosion protection.
Operative grease filling on request.

Installation

Installation tolerances

Shaft h5; hub H6

Inner ring/shaft

Steel , HRC 60^{+4} (HV 700^{+100}); Eht ≥ 1,3 mm; Rz ≤ = 2,5 µm

Outer ring/housing

Steel, HRC 60^{+4} (HV 700^{+100}); Eht ≥ 1,3 mm; Rz ≤ 2,5 µm

Constraints

The freewheel clutch insert element requires axial constraints on both sides.

Mating parts

Hardening and grinding of the mating parts is necessary. Chamfered shafts and hubs ease installation.

Bearing

Freewheel clutch insert elements are not self-centering. External bearing support to define the gap between mating parts (Shaft and housing) is necessary.